- [illegible] P30-31
- [illegible]

  [illegible] 2.6 [illegible]

  22:00 [illegible]

4. [illegible]

(1) [illegible] ([illegible]

(2) [illegible]

(3) [illegible]

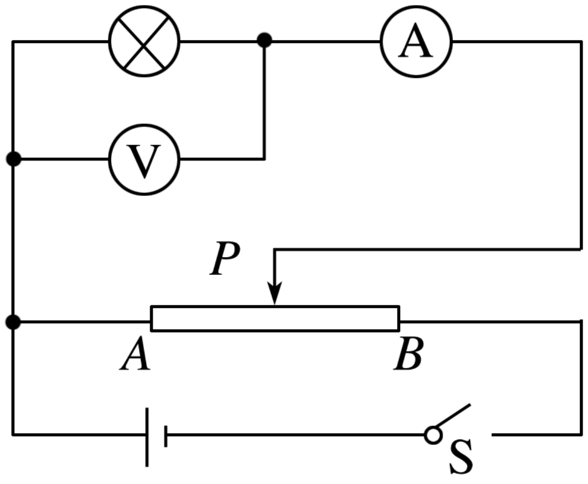

5. [illegible]

(1) [illegible] I [illegible] U [illegible]________ [illegible].

[illegible]

(2) [illegible]____ [illegible].

[illegible]

(3) [illegible] I [illegible] U [illegible]________________ [illegible].

[illegible]

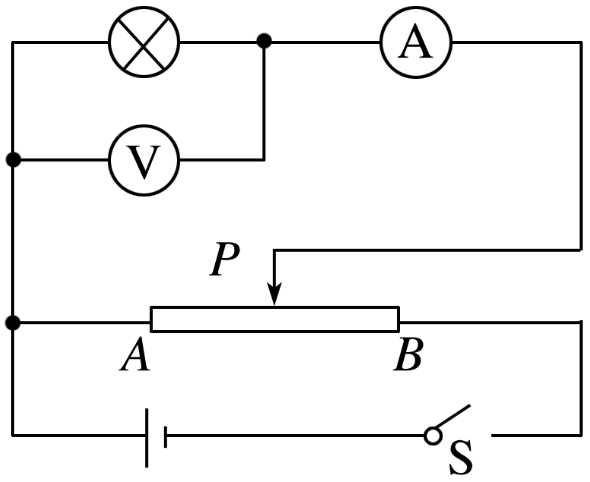

2.6

[illegible]

1. [illegible].

2. [illegible].

3. [illegible].

- [illegible]

[illegible]

220 V [illegible]

[illegible] ________ [illegible].

[illegible]

[illegible]

[illegible]

[illegible] a [illegible] b [illegible] c [illegible] d [illegible]. [illegible] b [illegible] c [illegible] d [illegible]

[illegible] [illegible] [illegible] a [illegible].

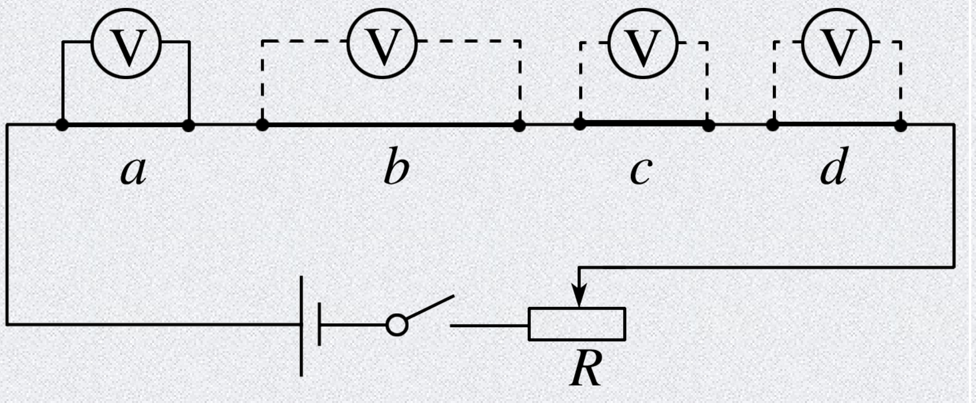

[illegible]	[illegible]	[illegible]	[illegible]	[illegible]
a	l	S	[illegible]	U
b	$2l$	S	[illegible]	$2U$
c	l	$2S$	[illegible]	$\frac{U}{2}$
d	l	S	[illegible]	$5U$

(1) [illegible]

(2) [illegible] a [illegible] b [illegible]

(3) [illegible] a [illegible] c [illegible]

(4) [illegible] a [illegible] d [illegible]

[illegible]

1. [illegible]

(1) [illegible] R [illegible] ______ [illegible] ______ [illegible] ______ [illegible].

[illegible] l [illegible] [illegible] S [illegible]

(2) [illegible] R [illegible] $\rho\frac{l}{S}$. ρ [illegible] l [illegible] S [illegible]

[illegible].

[illegible]

2. [illegible]

[illegible]. [illegible] ρ [illegible]. [illegible] ______ [illegible] ______ [illegible].

[illegible] [illegible]

[illegible] [illegible]( )

A. [illegible] ρ [illegible] l [illegible] S [illegible]

√ B. [illegible]

C. [illegible]

D. [illegible]

(1) [illegible].

(2) [illegible]

① [illegible].

② [illegible].

③ [illegible].

④ [illegible].

[illegible]

[illegible]

R [illegible] 2 [illegible]

[illegible]

A. $8R$　　B. $4R$　　C. $2R$　　D. $\frac{R}{2}$

√

[illegible]

[illegible] P [illegible] Q [illegible] a [illegible] 1 m [illegible] b [illegible] 0.2 m [illegible] c [illegible] 0.1 m [illegible] P [illegible] Q [illegible] U [illegible] I [illegible] U [illegible] 10 V [illegible] ρ [illegible]

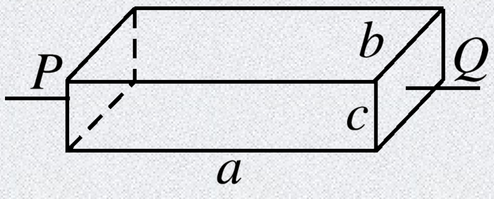

甲

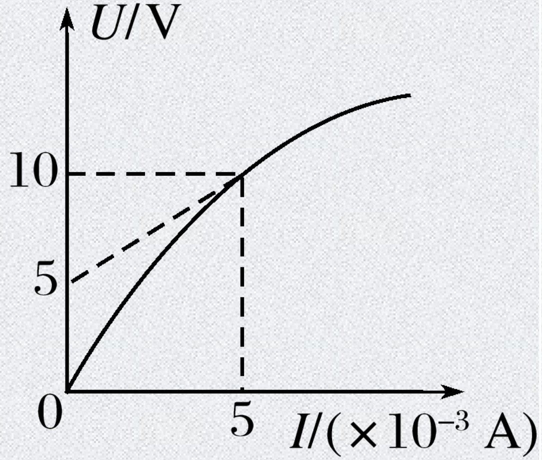

乙

(□□) □□□□□□□□□□□□ A □ B □□□□□□□ L □ $2L$ □□□□□□□□

□□□□□□□□□ 5 □□□□□□□□□□□

A. A □ B □□□□□□□□□□ 3:2

√ B. A □ B □□□□□□□□□□ 1:2

C. A □ B □□□□□□□□□□ 2:3

D. A □ B □□□□□□□□□□ 1:3

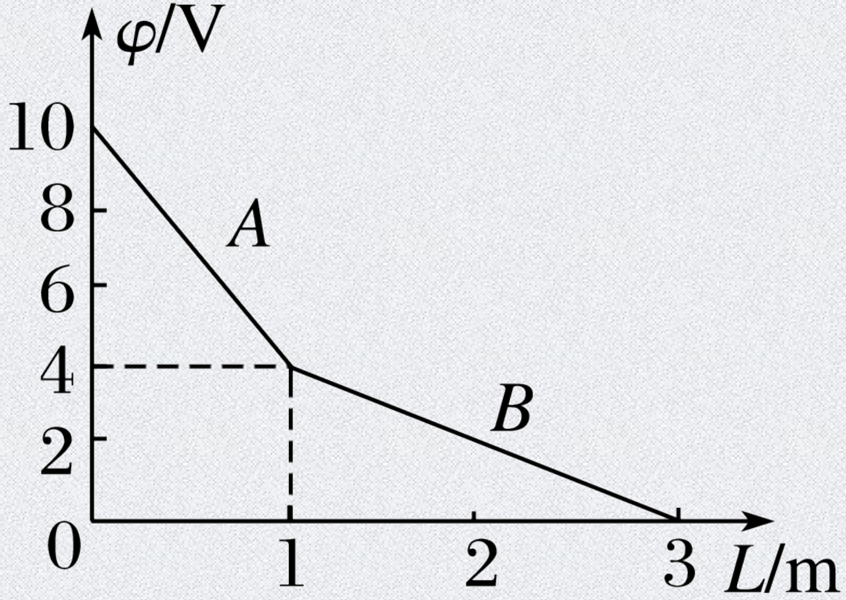

√

□□□□□□□□□□□□□□□□□□□□ R_x □□□□□□ R_0 □□□□□□ G □□□□□□□□□□□□ MN □□□

□□□□□□□□□□□□□□□□□□□ P □□□□□□□□□□ G □□□□□□□□□ MP □ l_1 □ PN □ l_2 □

□ R_x □□□□

A. $\frac{l_1}{l_2}R_0$

B. $\frac{l_1}{l_1 \square\ l_2}R_0$

√ C. $\frac{l_2}{l_1}R_0$

D. $\frac{l_2}{l_1 \square\ l_2}R_0$

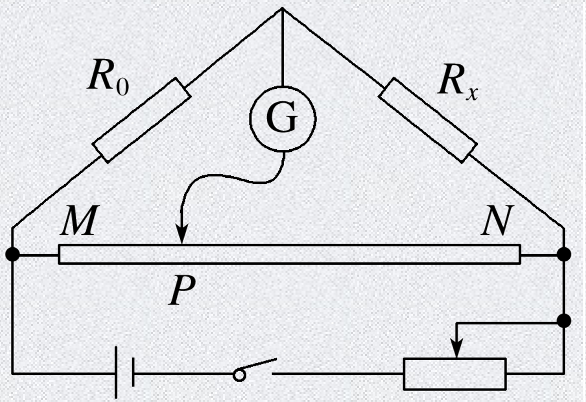

□□□ G □□□□□□□□□

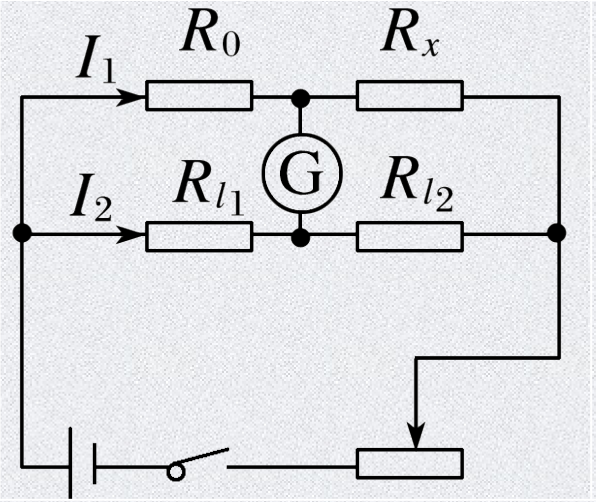

R_0与R_{l_1}两端电压相等，R_x与R_{l_2}两端电压相等